ITEM

BOT. BELLEVILLE 350 F 10 $ *

Color : BIANCO EXTRA

berlinpackaging.eu

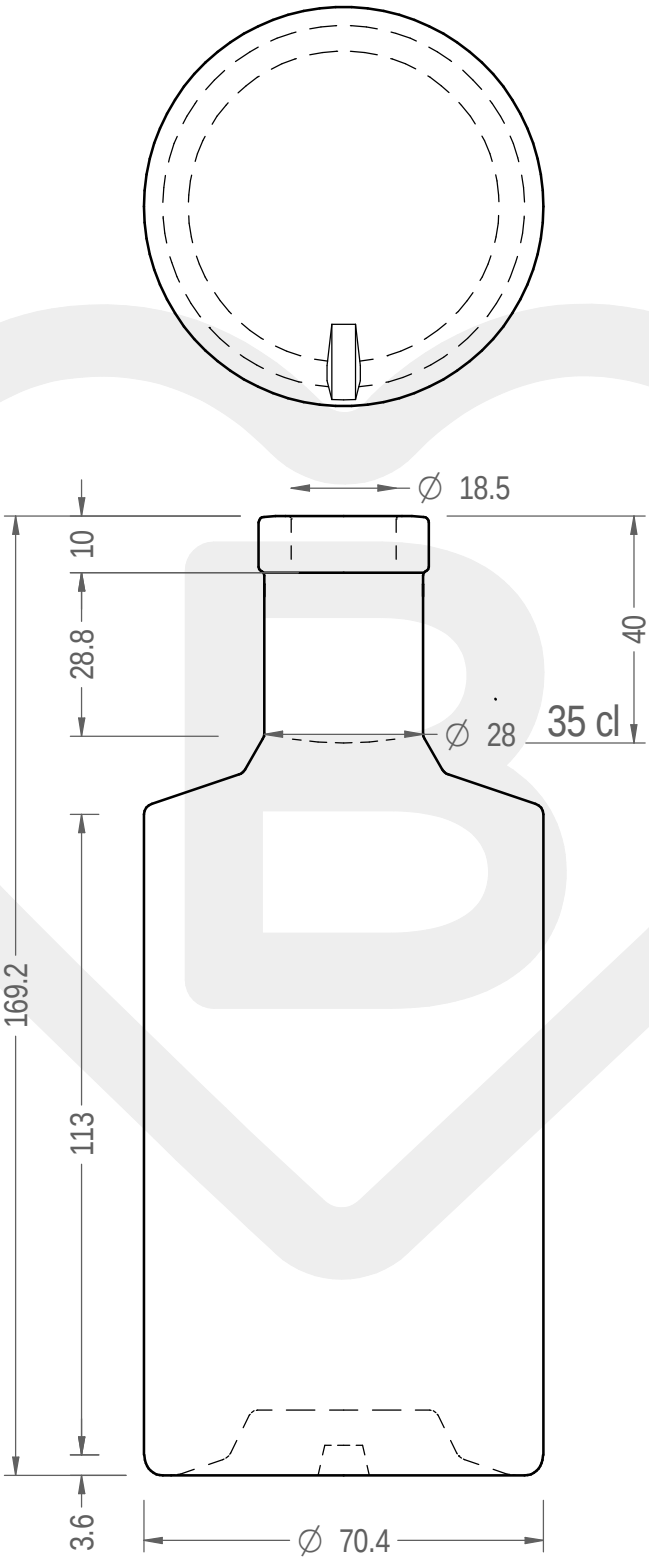

This drawing is approximate and not binding - Berlin Packaging Italy S.p.A. does not assume any guarantee or obligation for use of this drawing or for information contained therein

Brimful capacity (c.c.):	361	Weight (g):	288
Finish:	FASCETTA	Minimum through bore (mm):	-
Pressure resistance (bar):	-		

For full technical details please contact sales representative

ITEM CODE: **35463P1**

Source: 35463
Last update: 28/06/2023