ITEM

B. ALFIL ROTONDA 500 P31,5X18 VA

Color : VERDE ANTICO

berlinpackaging.eu

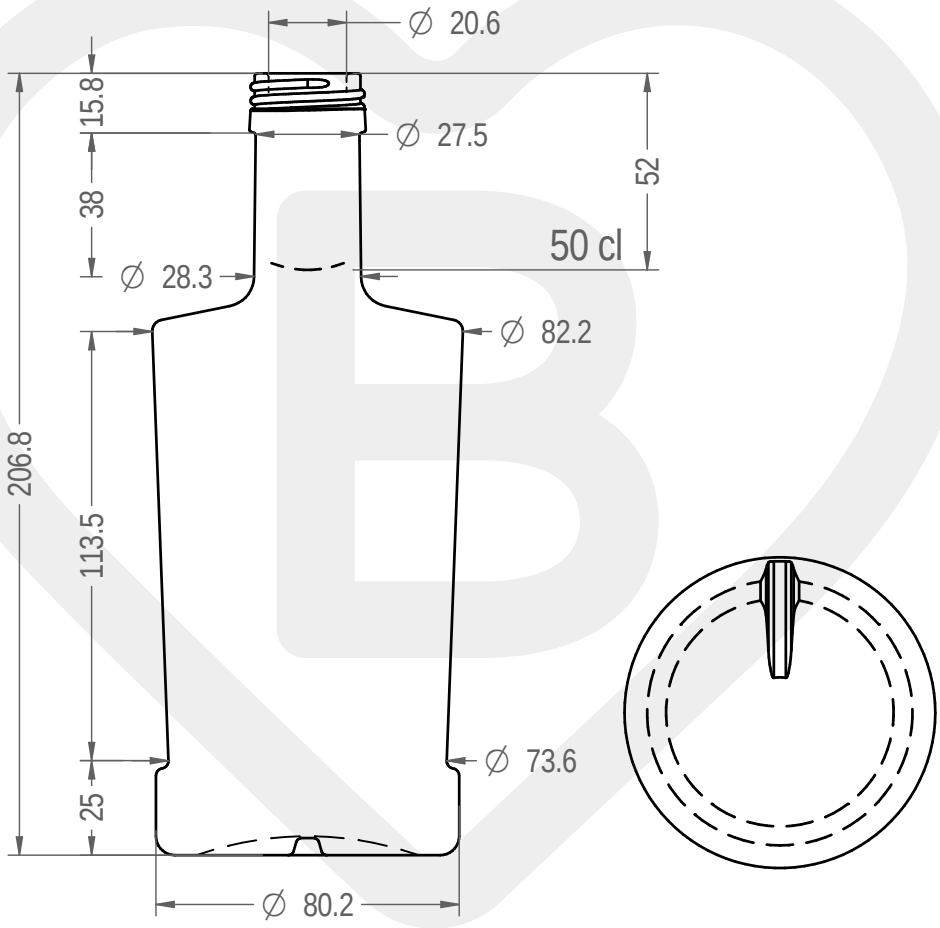

This drawing is approximate and not binding - Berlin Packaging Italy S.p.A. does not assume any guarantee or obligation for use of this drawing or for information contained therein

Brimful capacity (c.c.):	518	Weight (g):	500
Finish:	PILFER-PROOF	Minimum through bore (mm):	-
Pressure resistance (bar):	-		

For full technical details please contact sales representative

ITEM CODE: **35420P2**

Source: 35420
Last update: 01/03/2023